FUTEK MODEL QLA391

ITEM NUMBER: QSH01829

Custom Tension and Compression Thru Hole Load Cell w/ 4-20 mA Output

INCH [mm]	R.O.= Rated Output	
WIRING CODE CC1C		
+ Power Supply	- Ground	+ Current Output
PIN A	PIN B	PIN C

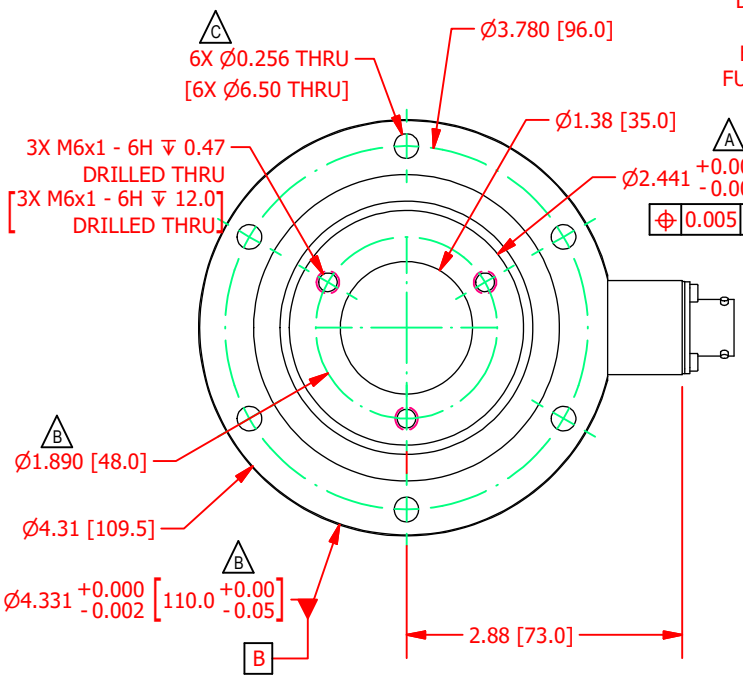

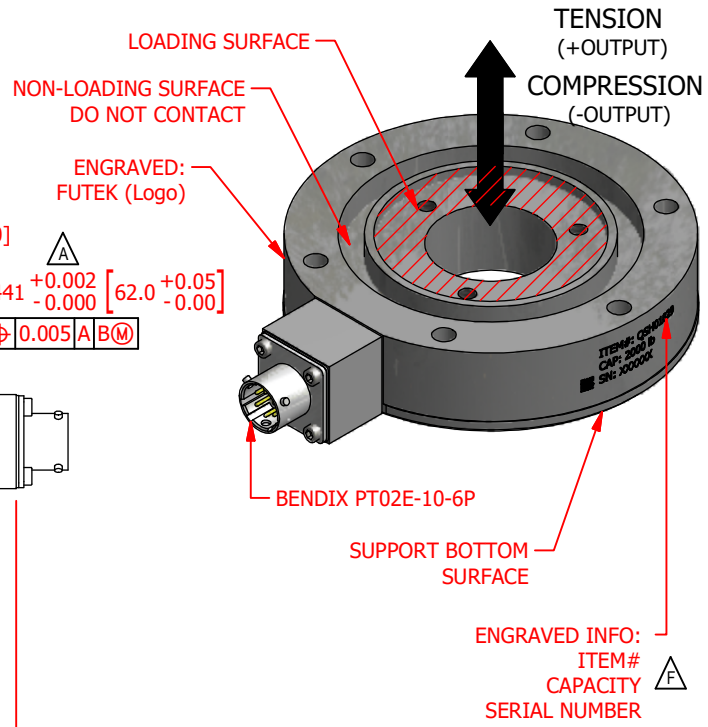

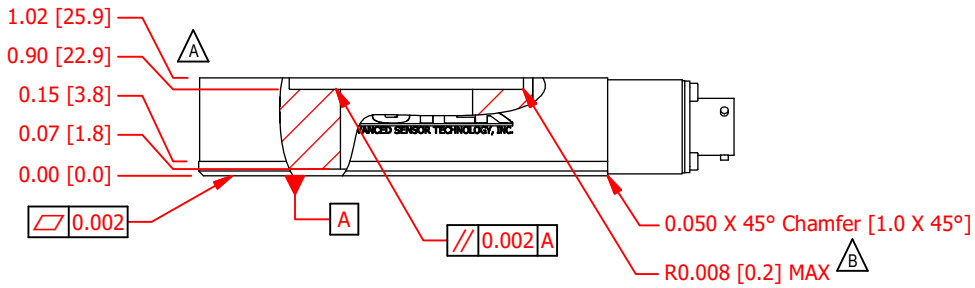

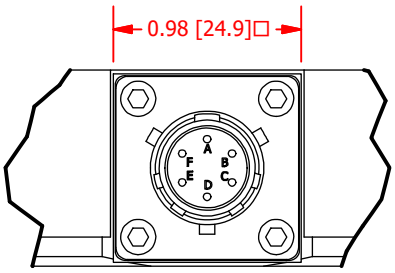

CONNECTOR DETAIL

S P E C I F I C A T I O N S:

RATED OUTPUT	±8 mA
CAPACITY	2000 lb. [8880N]
SAFE OVERLOAD	150 % of R.O.
ZERO BALANCE	12 mA
POWER SUPPLY	16-24 VDC
MAX OUTPUT LOAD IMPEDANCE	500 Ohm D
MAX CURRENT	46 mA @ Full Load
-3dB BANDWIDTH	1000 Hz
NONLINEARITY	±1% of R.O.
HYSTERESIS	±0.5% of R.O.
NONREPEATABILITY	±0.5% of R.O.
TEMP. SHIFT ZERO	±0.02% of R.O./°F (±0.036 of R.O./°C)
TEMP. SHIFT SPAN	±0.02% of LOAD/°F (±0.036 of LOAD/°C)
COMPENSATED TEMP.	60 to 160 °F (16 to 71 °C)
OPERATING TEMP	-13 to 185 °F (-25 to 85 °C)
WEIGHT (approx)	2 lb [907 g]
MATERIAL	17-4 PH S.S.
CONNECTOR:	BENDIX PT02E-10-6P
CALIBRATION (STD)	5 pt. TENSION AND COMPRESSION

DSPM Industria® sensori & trasduttori
Via Paolo Uccello 4 - 20148 Milano
Tel +39 02 48 009 757 Fax +39 02 48 002 070
info@dspmindustria.it www.dspmindustria.it

CUSTOMER APPROVAL- COMPANY:

CUSTOMER APPROVAL- NAME / DATE:

REVISIONS: (Refer to dwg # revision sheet)

A	1/4/2016	F	7/11/2019
B	1/6/2016		
C	1/12/2016		
D	10/26/2016		
E	7/1/2019		

OUTLINE DRAWING

STANDARD NOTES: (Unless Otherwise Specified)

ALL DIMENSIONS ARE IN INCHES

DRAWING INTERPRETATION DIMS. PER ASME-Y14.5M

REMOVE BURRS AND BREAK SHARP EDGES .005 - .015

THREADS PER HANDBOOK H-28

DIMENSIONS ARE SHOWN AFTER PLATING

3rd ANGLE PROJ.

ANGLE: ± 1/2˚

CHAMFER: ± 5˚

TOLERANCE: .X ± 0.1" .XX ± 0.01" .XXX ± 0.005"

This drawing is submitted solely for the information and exclusive use of the original addressee. It is not to be divulged in whole or in part, by any firm or individual without written permission from:

FUTEK ADVANCED SENSOR TECHNOLOGY, INC.

MODEL:	QLA391	DWG No.:	FO1410-F
DRAWN BY:	E. Pano	CREATED DATE:	11/10/2015
APPROVED BY:	R. Walker	APPROVED DATE:	11/11/2015
CHECKED BY:		CAGE: 1X8M	SHEET: 1 OF 1